1200B scope: Addendum B, 30-line television

8 October 2026. This addendum turns the 1200B into a **30-line television**: John Logie Baird's 1929–35 system of 30 vertical lines at 12.5 pictures a second. It works alongside the 405-line conversion and uses the same two changes inside the scope. **Status: the Pico box (option B) was built on 12 November 2026 and works: its sweeps and picture signal are right at 12.5, 25 and 50 pictures a second. The grid amplifier is next, then the first 30-line picture on the 1200B.**

There are two ways to do it:

- **Option A, a sound card only.** A PC or phone plays a specially made WAV file. One channel drives the Y amplifier directly, the other drives the grid through a single transistor, and the 1200B's own time base makes the frame sweep. Almost no parts.
- **Option B, the Pico box.** A Raspberry Pi Pico makes clean sweeps, stores the pictures itself, and repeats each picture 2 or 4 times so the screen doesn't flicker. It also accepts the same sound-card signal.

The 30-line signal, the test card and the WAV files are explained in *The 30-line Project405 test card and its sound file* (`Test_Card/`).

1 Why the 1200B suits 30 lines

Need	1200B
Line sweep, 375 Hz (up to 1500 Hz with repeats)	Y amplifier, DC to 100 kHz: plenty
Frame sweep, 12.5–50 Hz	X amplifier (D.C.), or its own time base (5 Hz upwards)
Video, about 13 kHz (up to 50 kHz with repeats)	The GRID socket, with the clamp from the 405 conversion
Resolution	The DG7-5's spot (about 0.7 mm) matches 30 lines across 22 mm almost exactly

The 405-line conversion struggles for resolution. A 30-line picture is exactly what the 1200B can show well.

The picture: 3 wide × 7 high, about **22 × 52 mm**, upright on the 7 cm screen. The lines are vertical. Line 1 is on the left, and each line runs from the top of the picture to the bottom.

2 Changes inside the scope

The same two as the 405-line conversion (§4 and §7 of the main report). If they are already done, there is nothing more to do:

1. **C4 replaced with 10 nF 2 kV.** The grid amplifier's output sits at about +230 V and the grid at about −800 V, so C4 sees over 1 kV.
2. **The grid clamp:** a 1N4007 across R18, anode to the BRILLIANCE side and cathode to the grid. Each line starts with a sync pulse, which the grid amplifier turns into the most negative part of the grid drive. The diode holds that level at the BRILLIANCE setting, so black stays black whatever the picture.

3 The grid amplifier (both options)

© 2026 Project405 · project405.co.uk · CC BY-NC-SA 4.0: free for non-commercial use with credit; selling boards or kits by permission only

Figure S5 — 30-line box for the 1200B: Pico, two DACs, audio input, and the grid amplifier

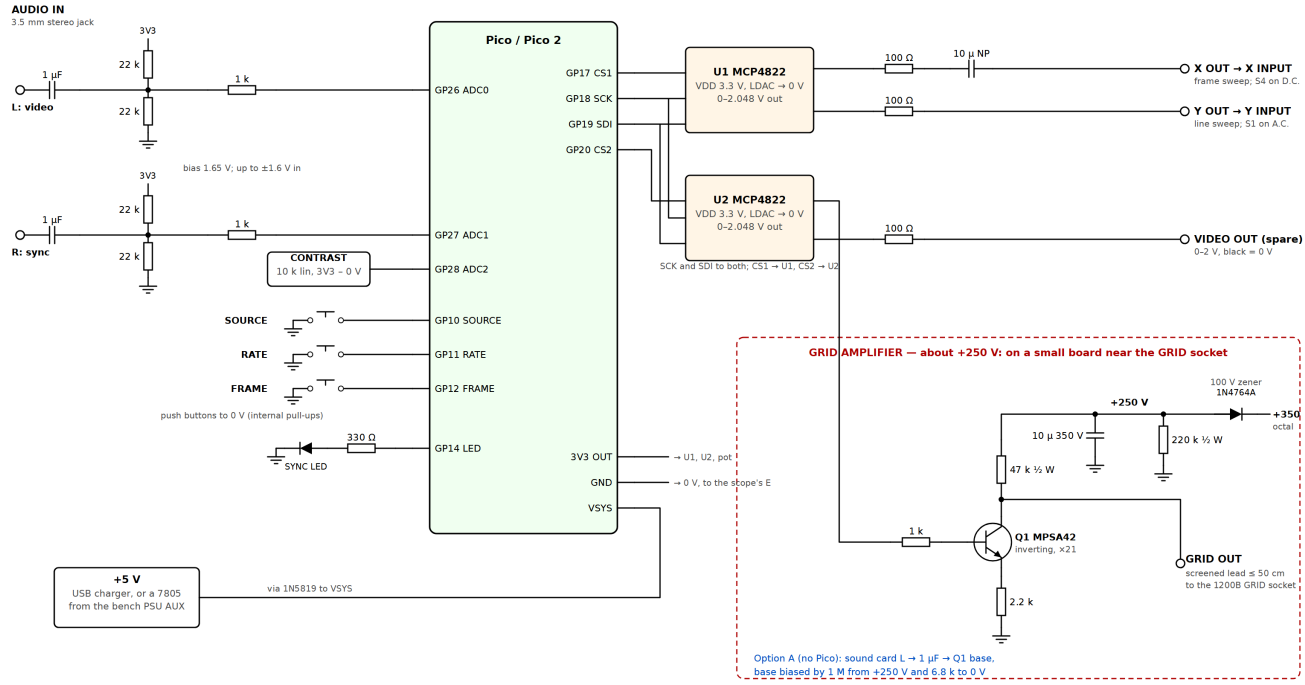

- Inside the 1200B: the grid clamp diode across R18 and the 10 nF 2 kV C4, exactly as in the 405-line conversion (§7). The clamp holds the blanking level at the BRILLIANCE setting.
- Q1's collector sits at 200–250 V: build the grid amplifier on its own small insulated board, and switch off and discharge the 10 µF before touching it.
- Confirm the rear octal pins with a meter (HT on pin 5?) before connecting anything to the +350 V.

A single **MPSA42** with 47 k in the collector and 2.2 k in the emitter: a gain of about 21, inverting. Its supply comes from the scope's **350 V** on the rear octal socket, dropped to about **+250 V** by a 100 V zener (1N4764A) in series, with a 220 k bleeder to keep the zener conducting and a 10 µF 350 V reservoir. (The MPSA42 is rated at 300 V, so it can't go straight on the 350 V.)

- **Drive:** about 25 V of grid swing from black to white, plus 4 V of "blacker than black" for the clamp.
- **Bandwidth:** about 100 kHz with a short lead: far more than 30 lines need.
- **Build it on a small insulated board near the GRID socket,** with a screened lead of 50 cm at most. The collector is at 200–250 V: switch off and discharge the 10 µF before touching it.
- **Rear octal pins:** confirm with a meter which pin carries the HT (it looks like pin 5) before connecting anything. This is still an open item from the 405 conversion.

Option A input: the sound card's left channel through 1 µF to the base, with the base biased at about 1.7 V by 1 MΩ from +250 V and 6.8 kΩ to 0 V. **Option B input:** the Pico's Z output (DAC) through 1 kΩ straight to the base, no bias needed.

4 Option A: a sound card and one transistor

© 2026 Project405 · project405.co.uk · CC BY-NC-SA 4.0: free for non-commercial use with credit; selling boards or kits by permission only

Figure S6 — Two ways to show 30-line pictures on the 1200B

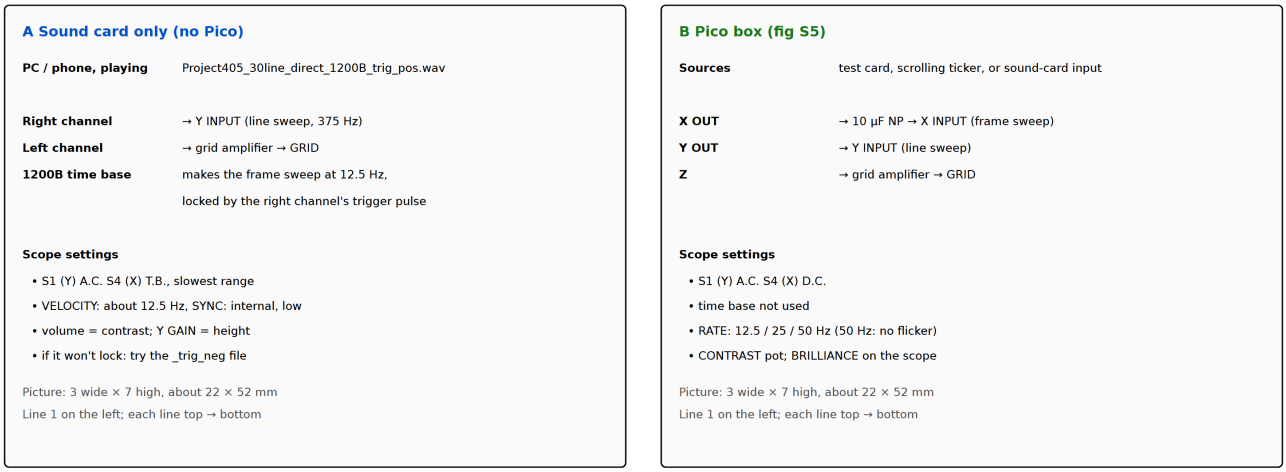

• Option A needs only the grid amplifier and three leads. It runs at the true 12.5 frames a second, so it flickers, and the gas-triode frame sweep is slightly curved (the lines bunch up towards one side). It shows any 30-line WAV made in this format.
• Option B adds the Pico box: straight sweeps, the test card without a PC, and 25 or 50 Hz repeats for a steady picture.

Play `Project405_30line_direct_1200B_trig_pos.wav` (in `Test_Card/`). It's made for this:

- **Left channel: the video, inverted.** The sync is the most *positive* part and white the most *negative*, because the grid amplifier inverts it back again. → grid amplifier → GRID.
- **Right channel: the line sweep itself,** a 375 Hz sawtooth: top of the picture at the start of each line, bottom at the end, and the flyback during the sync pulse. → **Y INPUT**, S1 on **A.C.** The 1200B's Y amplifier needs only about 0.28 V per cm, so a sound card drives it directly. Use Y GAIN to set the height.
- **The frame sweep: the 1200B's own time base,** S4 on **T.B.**, the slowest range, VELOCITY at about 12.5 Hz. Once a frame, during line 1's flyback (when the spot is blanked), the right channel carries a short **trigger pulse** larger than the sawtooth. Set the sync to take its signal from the Y amplifier (internal) at a low setting, so that only that pulse locks the time base. If it won't lock, try `..._trig_neg.wav`, which has the pulse the other way up. X GAIN sets the width.
- **Volume is the contrast.** Turn off every effect, equaliser and volume-levelling setting on the PC or phone.

Limits: it runs at the true 12.5 pictures a second, so it flickers like Baird's did, even on the DG7-5's medium-persistence screen. The gas-triode time base isn't a straight ramp, so the lines bunch up a little towards one side of the picture. And the sync arrangement of the 1200B (internal from the Y amplifier, or an external terminal) still needs confirming on the scope itself.

5 Option B: the Pico box

5.1 Circuit (figure S5)

- **Pico or Pico 2**, powered from 5 V (a USB charger, or a 7805 from the bench supply's AUX output) through a 1N5819 to VSYS.
- **Two MCP4822 dual DACs** on the Pico's 3.3 V (0–2.048 V out), sharing SCK and SDI, each with its own chip-select:
  - **U1 A: X OUT**, the frame sweep, one step per line. Through 100 Ω and a 10 µF non-polar capacitor to **X INPUT**, with S4 on **D.C.** The capacitor removes the DC offset, and into the 1 MΩ input it bows a 12.5 Hz sweep by under 1 %.
  - **U1 B: Y OUT**, the line sweep, top to bottom, through 100 Ω to **Y INPUT**, S1 on **A.C.**

© 2026 Project405 · project405.co.uk · CC BY-NC-SA 4.0: free for non-commercial use with credit; selling boards or kits by permission only

    - **U2 A: Z**, to the grid amplifier.
    - **U2 B: VIDEO OUT**, a spare 0–2 V video signal (black = 0 V). For example, it could later feed a CV2302 one-inch display.
- **AUDIO IN**, a 3.5 mm stereo jack. Each channel goes through 1 µF to a 22 k / 22 k divider that biases it at 1.65 V, then through 1 kΩ to an ADC input. It accepts up to about ±1.6 V.
- **CONTRAST** pot (10 k linear) on ADC2.
- **Buttons** SOURCE, RATE and FRAME to 0 V, and a **SYNC LED** that lights when an audio signal is locked.

5.2 What the buttons do

Button	Action
SOURCE	Test card → scrolling ticker ("PROJECT405 30 LINE TELEVISION") → AUDIO IN → back to the test card
RATE	12.5 → 25 → 50 pictures a second. 12.5 Hz is Baird's rate; 50 Hz shows each picture 4 times and doesn't flicker
FRAME	Rolls the picture by one line, for audio signals that have no frame sync

BRILLIANCE and FOCUS stay on the scope. CONTRAST is on the box.

5.3 How the firmware works (`firmware_30line/main.c`)

- **The two cores share the work.** Core 0 draws the picture; core 1 makes it.
- **Drawing.** For each of the 30 lines, core 0 sets X to that line's position. It then steps Y down through 70 positions, setting the grid voltage for each picture element, and then blanks the beam for 4 more steps while Y flies back to the top. That is 74 steps per line. At 50 Hz each step is 9 µs; at 12.5 Hz, 36 µs.
- **Three picture buffers.** Core 1 always writes into a buffer the display isn't using, so a picture is never shown half-changed.
- **The test card** is built into the firmware (`card30.h`, from the card's PNG). The **ticker** draws letters 15 lines wide and scrolls them up by one element every 80 ms.
- **AUDIO IN.** The ADC samples left, right and the CONTRAST pot in turn, 48 000 times a second each. The firmware tracks the lowest level (the sync tips) and the highest (peak white) of the signal, so the input level doesn't matter much.
    - If the right channel has pulses on it, they are the sync, and a long one marks line 1. Otherwise the sync tips on the left channel are used, and FRAME rolls the picture until it's the right way round.
    - After each sync pulse, the next 120 samples are the picture. They are averaged into 70 elements and stored as one line of the next picture.
    - It expects the format of `Project405_30line_card.wav`: 48 kHz, 128 samples a line.
- **Build:** `firmware_30line/build.ps1` makes `tv30_pico2.uf2` (Pico 2, 2 W) and `tv30_pico.uf2` (Pico, Pico W).

6 Setting up

1. Make the two scope changes (§2), if they aren't already done. Check the rear octal pins with a meter.
2. Build the grid amplifier. With no input, check about +250 V on the zener's anode and about 225 V on Q1's collector (Option B with the box powered: the Z output sits at "blank", about 2 V).
3. **Option B:** load the firmware and connect X, Y and the grid. With BRILLIANCE turned down, bring it up until the picture shows. Set X GAIN and Y GAIN for about 22 × 52 mm, centre it with the shift controls, then set BRILLIANCE so the black just disappears and adjust FOCUS. Start at 50 Hz; then try 12.5 Hz to see what Baird's viewers saw.

© 2026 Project405 · project405.co.uk · CC BY-NC-SA 4.0: free for non-commercial use with credit; selling boards or kits by permission only

4. **Option A:** connect the sound card, play the trig_pos file on repeat, and set the time base and sync as in §4 until the picture stands still.
5. Check the test card: the line test at the bottom should show every line separately on the left, and pairs on the right.

7 Parts

Item	Part	Approx.
Grid amplifier	MPSA42; 47 k ½ W, 2.2 k, 1 k; 1N4764A (100 V 1 W zener); 220 k ½ W; 10 µF 350 V; small insulated board; screened lead	£3
Option A extra	1 µF film, 1 MΩ, 6.8 kΩ, 3.5 mm stereo lead	£1
Option B	Pico 2 (or Pico)	£5
	2 × MCP4822	£5
	3.5 mm stereo jack socket, 2 × 1 µF, 4 × 22 k, 2 × 1 k, 3 × 100 Ω	£1.50
	10 µF non-polar (or 2 × 22 µF back to back), 10 k lin pot	£1.50
	3 push buttons, LED + 330 Ω, 1N5819, small box, BNC or phono sockets	£6
Inside the scope	10 nF 2 kV (new C4), 1N4007	from the 405 conversion
	Option A total	**about £4**
	Option B total	**about £22**

8 Open items

Item	Result
Rear octal pins (HT, chassis) confirmed	___
1200B sync selector: internal from Y, external terminal, polarity	___
Option A: locks with trig_pos or trig_neg?	___
Picture size reached (X and Y GAIN settings)	___
Flicker at 12.5, 25 and 50 Hz on the DG7-5	___

© 2026 Project405 (project405.co.uk). Licensed under CC BY-NC-SA 4.0: free to copy, build and adapt for non-commercial use, with credit to Project405, sharing changes on the same terms. Selling boards, kits or built units is by permission only (workshop@project405.co.uk). Material from others, credited where it appears, remains theirs.